ship Oct-14

Work Order ID 73023

Wednesday, August 24, 2011 8:57:39 AM

Item ID: D350-591-312 **Accept** **Setup Start** **Stop**

Revision ID:

Item Name: Heli-Access-Step, Long RH

Start Date: 8/24/2011 **Start Qty:** 10.00 **Cust Item ID:**

Required Date: 10/14/2011 **Req'd Qty:** 10.00 **Customer:**

Reference:

Approvals: **Process Plan:** ✓ **Date:** **Tooling:** **Date:** **Run Start** **Stop**

QC: **Date:** **SPC (Y/N):** **Date:**

Sequence ID/ Work Center ID	Operation Description	Set Up/ Run Hours	Tool ID	Tool #	Plan Code	Accept Qty	Reject Qty	Reject Number	Insp. Stamp
Draw Nbr	**Revision Nbr**								
D3272	Rev B								
100		0.00							
DC	DOCUMENT CONTROL								
Document Control	**Memo**	0.00							
	Photocopy bluefile and type labels as per PPP D350-591-312 CHG001								
110		0.00							
Large Fab	Large Fab								
Large Fab	**Memo**	0.00							
	1-Bevel end for welding FWD ONLY								
	2-Weld Support using Jig DT8719, weld Fwd End Plate as per QSI 004 & Dwg D3272								
	A/R Aluminum Rod 117884 114514								
	3-Grind End Plate flush								

5 11/10/14

MLJ 11-10-13 (10)

11-09-23-10 ϕ

Dart Aerospace Ltd

W/O:		WORK ORDER CHANGES					
DATE	STEP	PROCEDURE CHANGE	By	Date	Qty	Approval Chief Eng / Prod Mgr	Approval QC Inspector

Part No: _____ **PAR #:** _____ **Fault Category:** _____ **NCR:** Yes No **DQA:** _____ **Date:** _____

Resolution: _____ **Disposition:** _____ **QA: N/C Closed:** _____ **Date:** _____

NCR:		WORK ORDER NON-CONFORMANCE (NCR)						
DATE	STEP	Description of NC Section A	Corrective Action Section B			Verification Section C	Approval Chief Eng	Approval QC Inspector
			Initial Chief Eng	Action Description Chief Eng	Sign & Date			

NOTE: Date & initial all entries

H:\FORMS\Quality Assurance\approved QA\NCRWO RevE

Work Order ID 73023

Wednesday, August 24, 2011 8:57:39 AM

Item ID: D350-591-312 **Accept** **Setup Start** **Stop**

Revision ID:

Item Name: Heli-Access-Step, Long RH

Start Date: 8/24/2011 **Start Qty:** 10.00 **Cust Item ID:**

Required Date: 10/14/2011 **Req'd Qty:** 10.00 **Customer:**

Reference:

Approvals: **Process Plan:** _____ **Date:** _____ **Tooling:** _____ **Date:** _____ **Run Start** **Stop**

QC: _____ **Date:** _____ **SPC (Y/N):** _____ **Date:** _____

Sequence ID/ Work Center ID	Operation Description	Set Up/ Run Hours	Tool ID	Tool #	Plan Code	Accept Qty	Reject Qty	Reject Number	Insp. Stamp
120	QC9- Inspect visual per QSI004- Fusion Welds	0.00				x10	Ø	BE	11/10/04
QC Quality Control	Memo	0.00							
130	QC5- Inspect part completeness to step on W/O	0.00				x10 RH			
QC Quality Control	Memo	0.00							
140	Chemical Conversion Coat per QSI005 4.1	0.00							
HandFinish Hand Finishing	Memo	0.00							

S 11/10/04

10 x Ø M 11/10/04 RH

Dart Aerospace Ltd

W/O:		WORK ORDER CHANGES					
DATE	STEP	PROCEDURE CHANGE	By	Date	Qty	Approval Chief Eng / Prod Mgr	Approval QC Inspector

Part No: _____ **PAR #:** _____ **Fault Category:** _____ **NCR:** Yes No **DQA:** _____ **Date:** _____

Resolution: _____ **Disposition:** _____ **QA: N/C Closed:** _____ **Date:** _____

NCR:		WORK ORDER NON-CONFORMANCE (NCR)						
DATE	STEP	Description of NC Section A	Corrective Action Section B			Verification Section C	Approval Chief Eng	Approval QC Inspector
			Initial Chief Eng	Action Description Chief Eng	Sign & Date			

NOTE: Date & initial all entries

H:\fFORMS\Quality Assurance\approved QA\NCRWO RevE

Work Order ID 73023

Wednesday, August 24, 2011 8:57:39 AM

Item ID: D350-591-312 **Accept** **Setup Start**

Revision ID: **Stop**

Item Name: Heli-Access-Step, Long RH

Start Date: 8/24/2011 **Start Qty:** 10.00 **Cust Item ID:**

Required Date: 10/14/2011 **Req'd Qty:** 10.00 **Customer:**

Reference:

Approvals: **Process Plan:** _____ **Date:** _____ **Tooling:** _____ **Date:** _____ **Run Start**

QC: _____ **Date:** _____ **SPC (Y/N):** _____ **Date:** _____ **Stop**

Sequence ID/ Work Center ID	Operation Description	Set Up/ Run Hours	Tool ID	Tool #	Plan Code	Accept Qty	Reject Qty	Reject Number	Insp. Stamp
150	QC3- Inspect Part Finish	0.00							
QC	**Memo**	0.00	11·10·07			10	ϕ		
Quality Control									
180		0.00							
Large Fab	Large Fab								
Large Fab	**Memo**	0.00				10	ϕ		
	1-Assemble Leg Assembly as per Dwg D3272.		11·10·07						
	2-Leave one rivet out until welding is complete.								
	3-Bevel Aft end for welding								
	4-Inspect for foreign object as per QSI 024								
	5-Weld Aft End Plate as per QSI 004 & Dwg D3272								
	A/R: Aluminum Rod 114514								
	6-Grind End Plate flush								
	7-Install last rivet as per Dwg.								

Dart Aerospace Ltd

W/O:		WORK ORDER CHANGES					
DATE	STEP	PROCEDURE CHANGE	By	Date	Qty	Approval Chief Eng / Prod Mgr	Approval QC Inspector

Part No: _____ **PAR #:** _____ **Fault Category:** _____ **NCR:** Yes No **DQA:** _____ **Date:** _____

Resolution: _____ **Disposition:** _____ **QA: N/C Closed:** _____ **Date:** _____

NCR:		WORK ORDER NON-CONFORMANCE (NCR)						
DATE	STEP	Description of NC Section A	Corrective Action Section B			Verification Section C	Approval Chief Eng	Approval QC Inspector
			Initial Chief Eng	Action Description Chief Eng	Sign & Date			

NOTE: Date & initial all entries

H:\fFORMS\Quality Assurance\approved QA\NCRWO RevE

Work Order ID 73023

Wednesday, August 24, 2011 8:57:39 AM

Item ID: D350-591-312 **Accept** **Setup Start** **Stop**

Revision ID:

Item Name: Heli-Access-Step, Long RH

Start Date: 8/24/2011 **Start Qty:** 10.00 **Cust Item ID:**

Required Date: 10/14/2011 **Req'd Qty:** 10.00 **Customer:**

Reference:

Run Start **Stop**

Approvals: **Process Plan:** _____ **Date:** _____ **Tooling:** _____ **Date:** _____

QC: _____ **Date:** _____ **SPC (Y/N):** _____ **Date:** _____

Sequence ID/ Work Center ID	Operation Description	Set Up/ Run Hours	Tool ID	Tool #	Plan Code	Accept Qty	Reject Qty	Reject Number	Insp. Stamp
190	QC10- Inspect visual per QSI004- ground welds	0.00							
QC	Memo	0.00							
Quality Control									
200	QC5- Inspect part completeness to step on W/O	0.00				xco			
QC	Memo	0.00				RH			
Quality Control									
210	Chemical Conversion Coat per QSI005 4.1	0.00							
HandFinish	Memo	0.00							
Hand Finishing									

10X0 mf 11/10/11

Dart Aerospace Ltd

W/O:		WORK ORDER CHANGES					
DATE	STEP	PROCEDURE CHANGE	By	Date	Qty	Approval Chief Eng / Prod Mgr	Approval QC Inspector

Part No: _____ PAR #: _____ Fault Category: _____ NCR: Yes No DQA: _____ Date: _____

Resolution: _____ Disposition: _____ QA: N/C Closed: _____ Date: _____

NCR:		WORK ORDER NON-CONFORMANCE (NCR)						
DATE	STEP	Description of NC Section A	Corrective Action Section B			Verification Section C	Approval Chief Eng	Approval QC Inspector
			Initial Chief Eng	Action Description Chief Eng	Sign & Date			

NOTE: Date & initial all entries

H:\fFORMS\Quality Assurance\approved QA\NCRWO RevE

Work Order ID 73023

Wednesday, August 24, 2011 8:57:39 AM

Item ID: D350-591-312 **Accept** **Setup Start**

Revision ID: **Stop**

Item Name: Heli-Access-Step, Long RH

Start Date: 8/24/2011 **Start Qty:** 10.00 **Cust Item ID:**

Required Date: 10/14/2011 **Req'd Qty:** 10.00 **Customer:**

Reference:

Approvals: **Process Plan:** _____ **Date:** _____ **Tooling:** _____ **Date:** _____ **Run Start**

QC: _____ **Date:** _____ **SPC (Y/N):** _____ **Date:** _____ **Stop**

Sequence ID/ Work Center ID	Operation Description	Set Up/ Run Hours	Tool ID	Tool #	Plan Code	Accept Qty	Reject Qty	Reject Number	Insp. Stamp
220	White Gloss(Ref:4.3.5.1) per QSI005 4.3-Alum	0.00							
Powdercoat									
Powder Coating	**Memo**	0.00							
	START TIME: 12:00								
	OVEN TEMPERATURE: 320 °F								
M118439	FINISH TIME: 12:15								
230	Wing Walk as per dwg QSI005 4.4 Batch 118313	0.00							
HandFinish									
Hand Finishing	**Memo**	0.00							
240	QC3- Inspect Part Finish	0.00							
QC									
Quality Control	**Memo**	0.00							

10 X Ø M-f 11/10/12

10 BR 11-10-11.

10RH of lll wing counter

Work Order ID 73023

Wednesday, August 24, 2011 8:57:39 AM

Item ID: D350-591-312 **Accept** **Setup Start**

Revision ID:

Item Name: Heli-Access-Step, Long RH **Stop**

Start Date: 8/24/2011 **Start Qty:** 10.00 **Cust Item ID:**

Required Date: 10/14/2011 **Req'd Qty:** 10.00 **Customer:**

Reference:

Approvals: **Process Plan:** _____ **Date:** _____ **Tooling:** _____ **Date:** _____ **Run Start**

QC: _____ **Date:** _____ **SPC (Y/N):** _____ **Date:** _____ **Stop**

Sequence ID/ Work Center ID	Operation Description	Set Up/ Run Hours	Tool ID	Tool #	Plan Code	Accept Qty	Reject Qty	Reject Number	Insp. Stamp
250	Pick Kit	0.00							
Packaging						11/10/138			100
Packaging	**Memo**	0.00							
260	QC4- 100% Inspect kits for completeness	0.00							
QC			8 ulio/14						
Quality Control	**Memo**	0.00				210 RH			
270		0.00							
Packaging	Packaging								
Packaging	**Memo**	0.00							
Packaging	Identify and pack for shipping as per PPPD350-591-312 Location: HALL		REV B			a/10/138			100

Dart Aerospace Ltd

W/O:		WORK ORDER CHANGES					
DATE	STEP	PROCEDURE CHANGE	By	Date	Qty	Approval Chief Eng / Prod Mgr	Approval QC Inspector

Part No: _____ **PAR #:** _____ **Fault Category:** _____ **NCR:** Yes No **DQA:** _____ **Date:** _____

Resolution: _____ **Disposition:** _____ **QA: N/C Closed:** _____ **Date:** _____

NCR:		WORK ORDER NON-CONFORMANCE (NCR)						
DATE	STEP	Description of NC Section A	Corrective Action Section B			Verification Section C	Approval Chief Eng	Approval QC Inspector
			Initial Chief Eng	Action Description Chief Eng	Sign & Date			

NOTE: Date & initial all entries

H:\fFORMS\Quality Assurance\approved QA\NCRWO RevE

Work Order ID 73023

Wednesday, August 24, 2011 8:57:39 AM

Item ID: D350-591-312 **Accept** **Setup Start**

Revision ID: **Stop**

Item Name: Heli-Access-Step, Long RH

Start Date: 8/24/2011 **Start Qty:** 10.00 **Cust Item ID:**

Required Date: 10/14/2011 **Req'd Qty:** 10.00 **Customer:**

Reference:

Approvals: **Process Plan:** _____ **Date:** _____ **Tooling:** _____ **Date:** _____ **Run Start**

QC: _____ **Date:** _____ **SPC (Y/N):** _____ **Date:** _____ **Stop**

Sequence ID/ Work Center ID	Operation Description	Set Up/ Run Hours	Tool ID	Tool #	Plan Code	Accept Qty	Reject Qty	Reject Number	Insp. Stamp
280	QC21- Final Inspection - Work Order Release	0.00							11/10/17
QC Quality Control	Memo	0.00							

11-10-17

Dart Aerospace Ltd

W/O:		WORK ORDER CHANGES					
DATE	STEP	PROCEDURE CHANGE	By	Date	Qty	Approval Chief Eng / Prod Mgr	Approval QC Inspector

Part No: _____ **PAR #:** _____ **Fault Category:** _____ **NCR:** Yes No **DQA:** _____ **Date:** _____

Resolution: _____ **Disposition:** _____ **QA: N/C Closed:** _____ **Date:** _____

NCR:		WORK ORDER NON-CONFORMANCE (NCR)						
DATE	STEP	Description of NC Section A	Corrective Action Section B			Verification Section C	Approval Chief Eng	Approval QC Inspector
			Initial Chief Eng	Action Description Chief Eng	Sign & Date			

NOTE: Date & initial all entries

H:\fFORMS\Quality Assurance\approved QA\NCRWO RevE

Picklist Print

Wednesday, August 24, 2011 8:57:36 AM

6

Work Order ID: 73023

Parent Item: D350-591-312

Parent Item Name: Heli-Access-Step, Long RH

Start Date: 8/24/2011 **Required Date:** 10/14/2011

Start Qty: 10.00 **Required Qty:** 10.00

Comments:
IPP Rev:A 04.03.22 New issue KJ/RF
IPP Rev:B 07-06-09 Added D3572-1 JLM
IPP Rev:C 08-04-02 ECN1163 DD verified by:EC
IPP Rev:D 08-04-08 ECN1164 DD verified by:eC IPP Rev:D
fixe route seq in bom DD 10.04.28 verified by:EC

Component Item ID/ Item Name	Replacement Item ID	Mfg/ Purch	Bin Item	Primary Location	Last Location	Route Seq ID	Unit of Measure	Qty on Hand	Qty per Kit	Total Qty	Qty Issued	Date Issued	Status
D3272-1 Step		Manufactured	No			110	Each	10.0000	1	10	11·09·17		
				Location		**Loc Qty**		**Loc Code**					
				WA 373028		10				10			
				71963		10				~~10~~			
D3067-1 End Plate		Manufactured	No			110	Each	54.0000	1	10	11·10·04		
				Location		**Loc Qty**		**Loc Code**					
				WA B73404		53				10			
				67582		2							
				70700		51							
				WA016		1							
				68214		1							
D3219-1 Plate		Manufactured	No			110	Each	88.0000	2	20	11·10·04		
				Location		**Loc Qty**		**Loc Code**					
				WA		48							
				72128		48				20			
				WA017		40							
				68338		40							

Dart Aerospace Ltd

W/O:		WORK ORDER CHANGES					
DATE	STEP	PROCEDURE CHANGE	By	Date	Qty	Approval Chief Eng / Prod Mgr	Approval QC Inspector

Part No: _____ **PAR #:** _____ **Fault Category:** _____ **NCR:** Yes No **DQA:** _____ **Date:** _____

Resolution: _____ **Disposition:** _____ **QA: N/C Closed:** _____ **Date:** _____

NCR:		WORK ORDER NON-CONFORMANCE (NCR)						
DATE	STEP	Description of NC Section A	Corrective Action Section B			Verification Section C	Approval Chief Eng	Approval QC Inspector
			Initial Chief Eng	Action Description Chief Eng	Sign & Date			

NOTE: Date & initial all entries

H:\FORMS\Quality Assurance\approved QA\NCRWO RevE

Picklist Print

Wednesday, August 24, 2011 8:57:36 AM

Work Order ID: 73023

Parent Item: D350-591-312

Parent Item Name: Heli-Access-Step, Long RH

Start Date: 8/24/2011 **Required Date:** 10/14/2011

Start Qty: 10.00 **Required Qty:** 10.00

D3066-1	Manufactured	No	180	Each	87.0000	2	20	11·10·07
Spacer								

Location	Loc Qty	Loc Code	
WA B73409	87		20
70699	87		

MS20600-AD4W4	Purchased	No	180	Each	1,520.000	16	160	11·10·07
Rivets								

Location	Loc Qty	Loc Code	
ST321 B118840	1515		18
116188	59		
117364	1000		142
117601	200		
117885	195		
118267	61		
WA018	5		
116712	5		

D3065-041	Manufactured	No	180	Each	0.0000	1	10	11·10·07
Step Leg Assembly Hi								

B73292

D3067-1	Manufactured	No	180	Each	54.0000	1	10	11·10·07
End Plate								

Location	Loc Qty	Loc Code	
WA B73404	53		10
67582	2		
70700	51		
WA016	1		
68214	1		

Picklist Print

Wednesday, August 24, 2011 8:57:36 AM

Work Order ID: 73023

Parent Item: D350-591-312

Parent Item Name: Heli-Access-Step, Long RH

Start Date: 8/24/2011 **Required Date:** 10/14/2011

Start Qty: 10.00 **Required Qty:** 10.00

AN3-35A Bolt	Purchased	No		250	Each	157.0000	2	20	(1x) M118838

Location		Loc Qty	Loc Code
ST353		157	
	117619	3	
	117794	14	
	118112	40	1
	118451	50	
	118628	50	18

D3235-1 Mounting Lug	Manufactured	No		250	Each	177.0000	2	20	

Location		Loc Qty	Loc Code
ST471		77	
	69837	77	
ST481		100	
	71965	100	20

D3278-041 Support Assembly	Manufactured	No		250	Each	26.0000	1	10	(6x) B72132 (4x) B73107

Location		Loc Qty	Loc Code
ST471		26	
	69741	26	

AN960JD416 Washer	NAS1149D0463J	Purchased	No	250	Each	0.0000	16	160	59 M118612 101 M118384
AN960JD516 Washer	NAS1149D0563J	Purchased	No	250	Each	0.0000	4	40	M118206 11/10/13 (10)

Picklist Print

Wednesday, August 24, 2011 8:57:36 AM

Work Order ID: 73023

Parent Item: D350-591-312

Parent Item Name: Heli-Access-Step, Long RH

Start Date: 8/24/2011 **Required Date:** 10/14/2011

Start Qty: 10.00 **Required Qty:** 10.00

AN5-36A Bolt	Purchased	No	250	Each	157.0000	2	20	M118838

Location	Loc Qty	Loc Code
ST341	157	
117794	7	
118012	50	
118451	100	

D2618 Bushing	Manufactured	No	250	Each	132.0000	2	20	B73408

Location	Loc Qty	Loc Code
ST019	132	
70702	28	
71600	104	

D2230-3 Lug	Manufactured	No	250	Each	304.0000	4	40	B73396 11/10/13

Location	Loc Qty	Loc Code
ST	220	
70694	20	
71964	100	1x
~~72125~~	100	17x
ST476	4	
53881	4	
ST480	80	
70973	80	

Picklist Print

Wednesday, August 24, 2011 8:57:36 AM

Work Order ID: 73023

Parent Item: D350-591-312

Parent Item Name: Heli-Access-Step, Long RH

Start Date: 8/24/2011 **Required Date:** 10/14/2011

Start Qty: 10.00 **Required Qty:** 10.00

D2856-400 Abraison Strip	Manufactured	No	250	f	254.7845	1.2	12	11/10/13

Location		Loc Qty	Loc Code
ST403		38.1149	
	68076	38.1149	
ST409		216.6696	
	63735	0.6696	
	71164	216	

S 40 — Inventory 5/11/10/14

cut (2) D2856-400-720 as per dwg

MS21042L3 Nut	Purchased	No	250	Each	1,835.000	2	20	

S 40

Location		Loc Qty	Loc Code
ST300		1835	
	117441	190	
	117601	400	
	117885	245	
	118451	1000	

20

AN4-13A Bolt	Purchased	No	250	Each	1,006.000	8	80	M118706 11/10/13

S 40

Location		Loc Qty	Loc Code
ST357		1006	
	117962	4	
	118078	594	
	118350	108	
	118351	300	

Picklist Print

Wednesday, August 24, 2011 8:57:36 AM

Work Order ID: 73023

Parent Item: D350-591-312

Parent Item Name: Heli-Access-Step, Long RH

Start Date: 8/24/2011 **Required Date:** 10/14/2011

Start Qty: 10.00 **Required Qty:** 10.00

MS21042L5		Purchased	No	250	Each	1,153.000	2	20
Nut								

Location	Loc Qty	Loc Code
ST300	1153	
116105	5	
116548	53	
117441	494	20
117591	15	
117611	90	
118179	496	

MS21042L4		Purchased	No	250	Each	4,539.000	8	80
Nut								

Location	Loc Qty	Loc Code
ST300	4539	
117441	394	
117601	645	
117885	1500	
118451	2000	80

AN960JD10	NAS1149D0363J	Purchased	No	250	Each	0.0000	4	40
Washer								

M118612 11/10/13

DESIGN	DRAWN BY	DART AEROSPACE LTD HAWKESBURY, ONTARIO, CANADA	
CHECKED	APPROVED	DRAWING NO. D3272	REV. B SHEET 1 OF 3
DATE 07.05.18		TITLE STEP ASSEMBLY, HI LONG	SCALE NTS

A	04.03.01	NEW ISSUE
B	07.05.18	D3272-1 WAS D2622-120

RELEASED
07 06 04

QTY -041	QTY -042	PART NUMBER	DESCRIPTION
X		**D3272-041**	**STEP ASSEMBLY, HIGH LONG (LH)**
	X	**D3272-042**	**STEP ASSEMBLY, HIGH LONG (RH)**
1	1	D3065-041	LEG ASSEMBLY
2	2	D3066-1	SPACER
2	2	D3067-1	END PLATE
2	2	D3219-1	SUPPORT
B 1	1	D3272-1	STEP
16	16	MS20600AD4W4	RIVET

GENERAL NOTES:

1) D3272-041 SHOWN. FOR D3272-042, INSTALL D3219-1 SUPPORT OPPOSITE SIDE
2) WELD PER DART QSI 004
3) FINISH: CHEMICAL CONVERSION COAT PER DART QSI 005.4.1
   POWDER COAT ASSEMBLY WHITE (4.3.5.1) PER DART QSI 005 4.3
   BLACK ANTI-SKID PAINT PER DART QSI 005 4.4
4) TOLERANCES ARE PER DART QSI 018 UNLESS OTHERWISE NOTED.
5) ALL DIMENSIONS ARE IN INCHES UNLESS OTHERWISE NOTED.
6) BREAK ALL SHARP EDGES 0.005 TO 0.010 MAX.

7303

Copyright © 2004 by DART AEROSPACE LTD
THIS DOCUMENT IS PRIVATE AND CONFIDENTIAL AND IS SUPPLIED ON THE EXPRESS CONDITION THAT IT IS NOT TO BE USED FOR ANY PURPOSE OR COPIED OR COMMUNICATED TO ANY OTHER PERSON WITHOUT WRITTEN PERMISSION FROM DART AEROSPACE LTD.

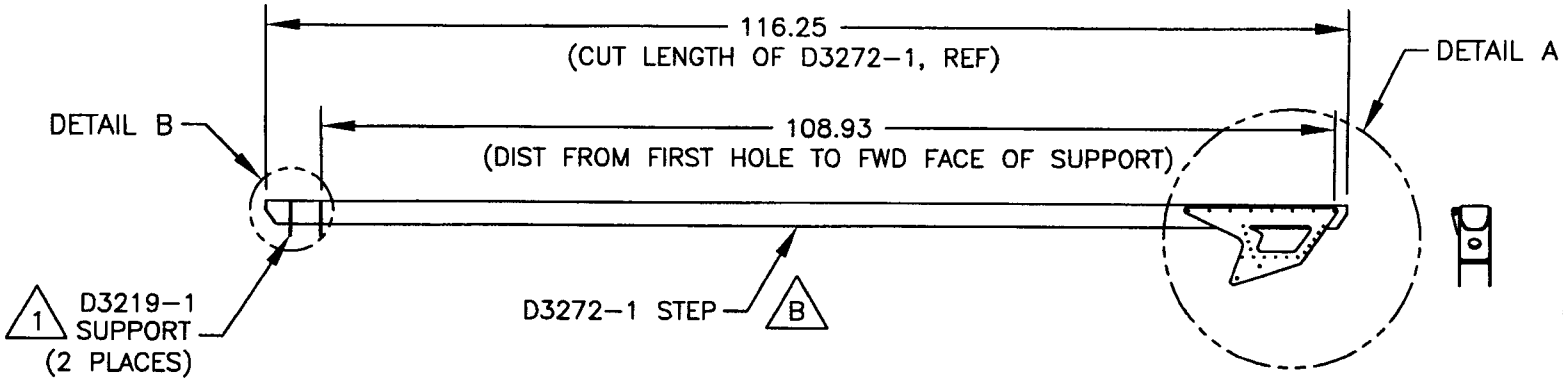

D3272-041 STEP ASSEMBLY (LH, SHOWN)

D3272-042 STEP ASSEMBLY (RH, OPPOSITE)

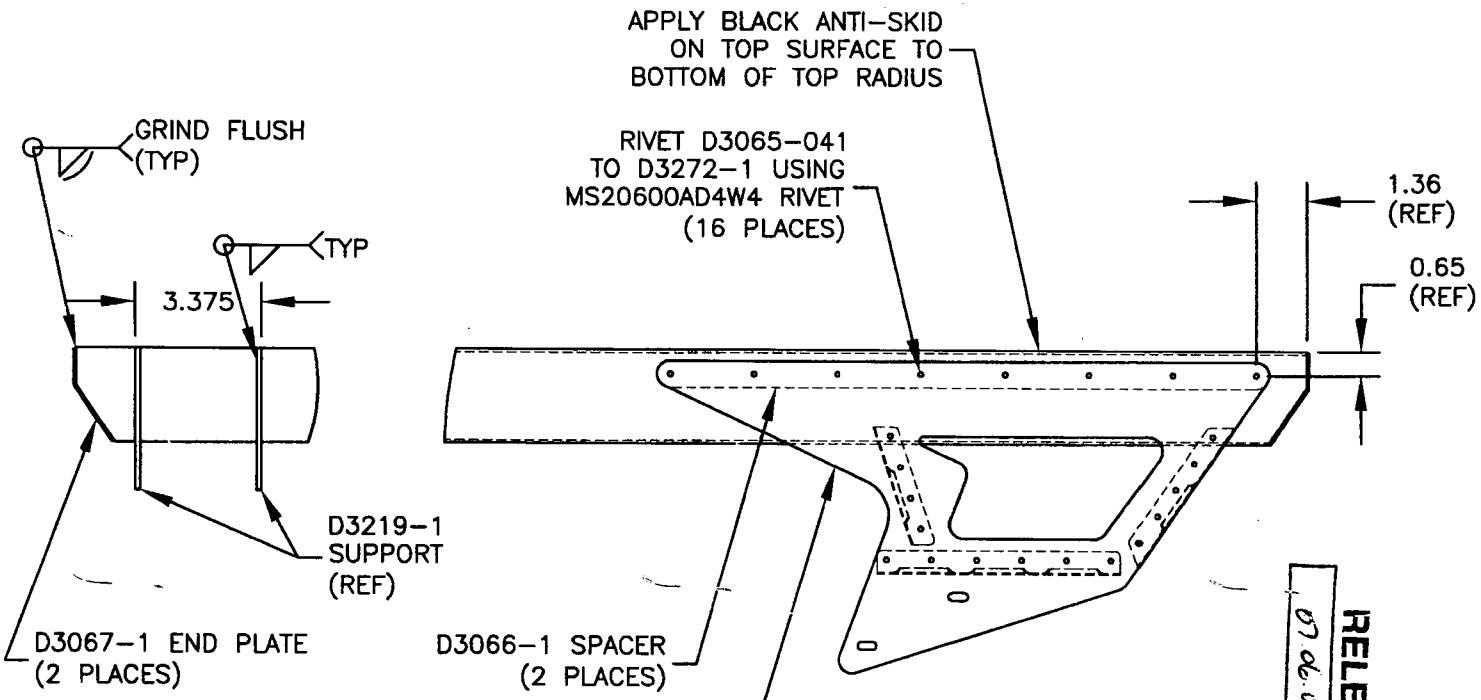

DETAIL B
(SCALE 1:5)

DETAIL A
(SCALE 1:5)

RELEASED
07.06.04

73023

DESIGN	DRAWN BY	DART AEROSPACE LTD HAWKESBURY, ONTARIO, CANADA
CHECKED	APPROVED	DRAWING NO. D3272 — REV. B
DATE 07.05.18		SHEET 2 OF 3
		TITLE STEP ASSEMBLY, HI LONG — SCALE 1:20

Copyright © 2004 by DART AEROSPACE LTD
THIS DOCUMENT IS PRIVATE AND CONFIDENTIAL AND IS SUPPLIED ON THE EXPRESS CONDITION THAT IT IS NOT TO BE USED FOR ANY PURPOSE OR COPIED OR COMMUNICATED TO ANY OTHER PERSON WITHOUT WRITTEN PERMISSION FROM DART AEROSPACE LTD.

DESIGN	DRAWN BY	DART AEROSPACE LTD HAWKESBURY, ONTARIO, CANADA	
CHECKED	APPROVED	DRAWING NO. D3272	REV. B SHEET 3 OF 3
DATE 07.05.18		TITLE STEP ASSEMBLY, HI LONG	SCALE 1:20

RELEASED
07.06.04

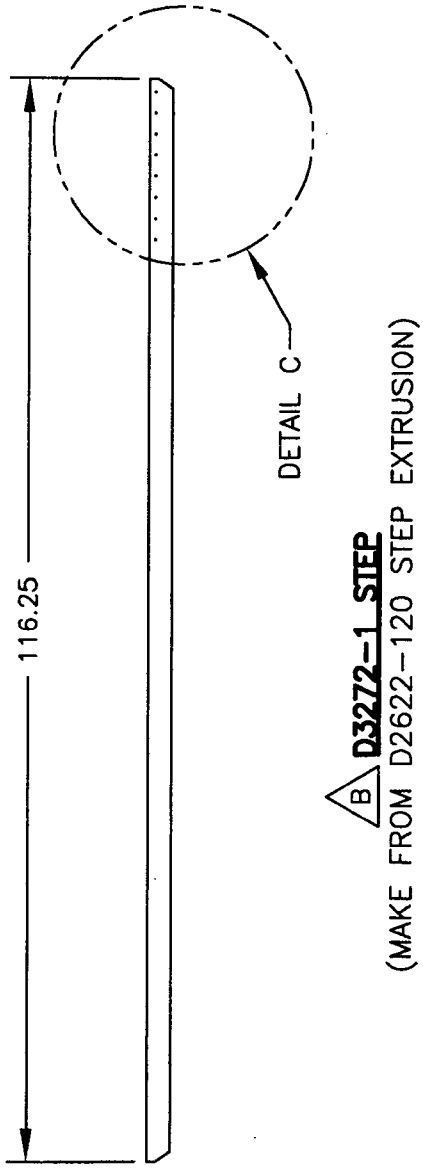

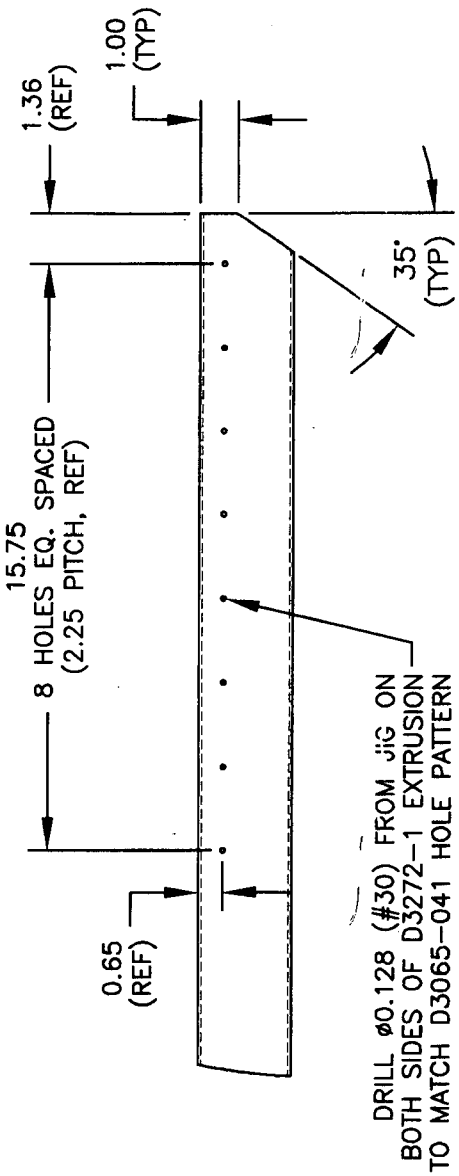

DETAIL C
(SCALE 1:5)

13023

Copyright © 2004 by DART AEROSPACE LTD
THIS DOCUMENT IS PRIVATE AND CONFIDENTIAL AND IS SUPPLIED ON THE EXPRESS CONDITION THAT IT IS NOT TO BE USED FOR ANY PURPOSE OR COPIED OR COMMUNICATED TO ANY OTHER PERSON WITHOUT WRITTEN PERMISSION FROM DART AEROSPACE LTD.

Qty -211	Qty -212	Qty -213	Qty -214	Qty -215	Qty -216	Qty -311	Qty -312	Part Number	Description
X								D350-591-211	***Heli-Access-Step***™, Long Step – High Skid, LH
	X							D350-591-212	***Heli-Access-Step***™, Long Step – High Skid, RH
		X						D350-591-213	***Heli-Access-Step***™, Short Step – High Skid, LH
			X					D350-591-214	***Heli-Access-Step***™, Short Step – High Skid, RH
				X				D350-591-215	***Heli-Access-Step***™, Short Step – Low Skid, LH
					X			D350-591-216	***Heli-Access-Step***™, Short Step – Low Skid, RH
						X		D350-591-311	***Heli-Access-Step***™, Long Step – High Skid, LH
							X	D350-591-312	***Heli-Access-Step***™, Long Step – High Skid, RH
1								D3070-041	STEP ASSEMBLY (HIGH-LONG, LH)
	1							D3070-042	STEP ASSEMBLY (HIGH-LONG, RH)
		1						D3078-041	STEP ASSEMBLY (HIGH-SHORT, LH)
			1					D3078-042	STEP ASSEMBLY (HIGH-SHORT, RH)
				1				D3168-041	STEP ASSEMBLY (LOW-SHORT, LH)
					1			D3168-042	STEP ASSEMBLY (LOW-SHORT, RH)
						1		D3272-041	STEP ASSEMBLY (HIGH-LONG, LH)
							1	D3272-042	STEP ASSEMBLY (HIGH-LONG, RH)
4	4							D2182B035	RUBBER CUSHION
		2	2	2	2			D2230-1	MOUNTING LUG
		2	2	2	2	4	4	D2230-3	MOUNTING LUG
8	8							D2274	RADIUS BLOCK
						2	2	D2618	BUSHING
4	4	4	4	4	4			D2732-030	CUSHION
2	2	1	1	1	1	2	2	D2856-400-720	ABRASION STRIP
2	2							D3064-1	CLAMP
1	1							D3079-041	SUPPORT ASSEMBLY
4	4							D3080-1	CLAMP
						2	2	D3235-1	MOUNTING LUG
						1	1	D3278-041	SUPPORT ASSEMBLY
2	2	2	2	2	2	2	2	AN3-35A	BOLT
10	10	2	2	2	2			AN4-11A	BOLT
		4	4	4	4	8	8	AN4-13A	BOLT
						2	2	AN5-36A	BOLT
4	4	4	4	4	4	4	4	AN960JD10	WASHER
20	20	12	12	12	12	16	16	AN960JD416	WASHER
						4	4	AN960JD516	WASHER
2	2	2	2	2	2	2	2	MS21042L3	NUT
10	10	6	6	6	6	8	8	MS21042L4	NUT
						2	2	MS21042L5	NUT
						1	1	*DSI 9410-011	STEP MODIFICATION KIT

*DSI 9410-011 Step Modification Kits are provided with all D350-591-311 and D350-591-312 Steps. This kit is provided as an option for the installer and is therefore **NOT REQUIRED** to complete the installation of the D350-591-311 or D350-591-312 Steps. Refer to Figure 21 for installation of the DSI 9410-011 Kit.

• COPYRIGHT © 1993 BY DART AEROSPACE LTD •
THIS DOCUMENT IS PRIVATE AND CONFIDENTIAL AND IS SUPPLIED ON THE EXPRESS CONDITION THAT IT IS NOT TO BE USED FOR ANY PURPOSE OR COPIED OR COMMUNICATED TO ANY OTHER PERSON WITHOUT WRITTEN PERMISSION FROM DART AEROSPACE LTD.